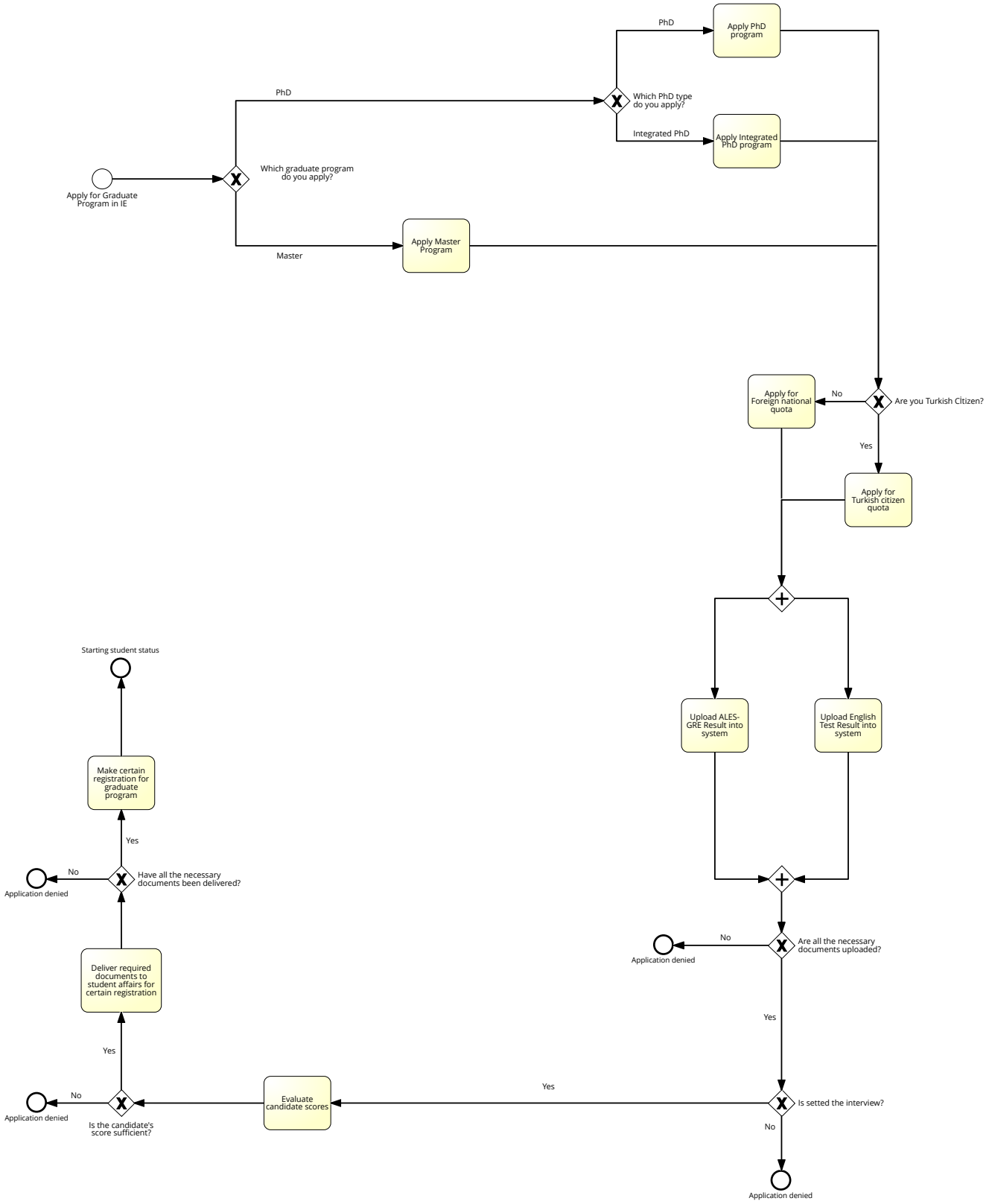Graduate (master & phd program) program application process